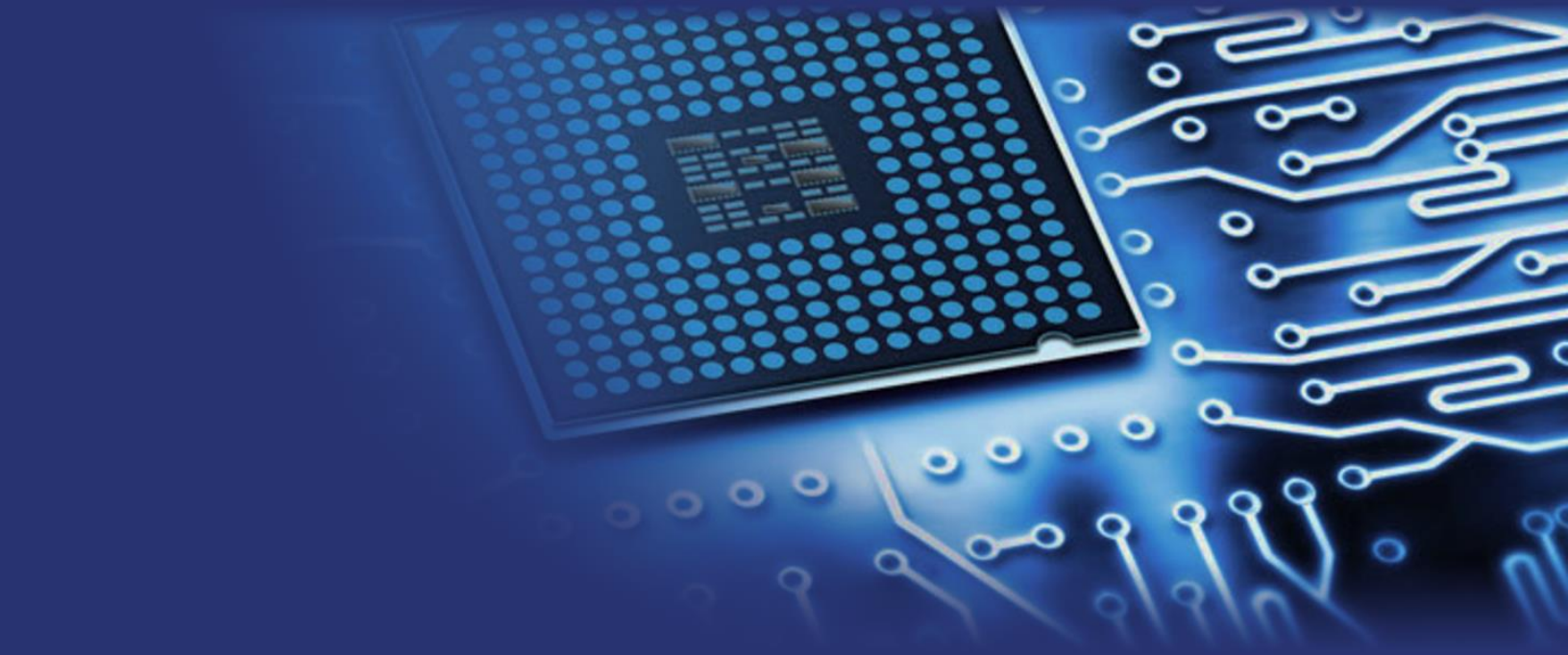

Solenoid Catalogue

STEGIA

Innovative drive technology since 1993

Stegia has grown into a multinational group providing technically innovative motor solutions. We note with pleasure the appreciation of the value placed on our investments by the market.

Our Head Office in Västerås, Sweden, has been supplemented by a production unit and motor development factory in Shanghai. Through strategic selection of areas, we continue to expand activities in manufacturing, development and cross border sales.

With 25 years' experience and creative engineers situated worldwide, we possess the resources required to handle large customers, large volumes, efficient design solutions and can make dynamic contributions to developing companies. With R&D in Sweden and production in China we have the best combination of cost, competence and efficiency.

Johan Stjernberg, Chief Executive Officer

Contact information
Stegia AB
Regattagatan 22B
723 48 Västerås, Sweden
+46 (0) 21 811 822
info@stegia.se
www.stegia.com

STEGIA

AC 1038L/S C Frame Solenoid

Key Features

- Small and simple structure solutions
- Long Stroke and high performance
- Multiple plunger and push shaft type can be selected

General Specifications

Duty cycle(%)	Continuous 100%	Or less 50%	Or less 25%	Or less 10%
Max on time in sec(s)	∞	50	18	3
Watts at 20℃(w)	4	8	16	40
Ampere-turns at 20℃	580	841	1102	1710

Part Number	Resistance (ohm)	No. Turns	Voltage (VDC)			
AC 1038 L XX A XX L: Pull S: Push Voltage(V) Serial No.: A/B/C Resistance(Ω)	9	870	6	8.5	12	19
	36	1781	12	17	24	38
	144	3308	24	34	48	76
	576	6476	48	68	96	152

Stegia AB
Regattagatan 22B
723 48 Västerås, Sweden
+46 (0) 21 811 822
info@stegia.com

Stegia Shanghai Co., Ltd.
A-7, No.38, Dongsheng Rd
Pudong, Shanghai, China, 201201
+86 21 58591682

www.stegia.com

Optional Features

- Custom plunger and push shaft

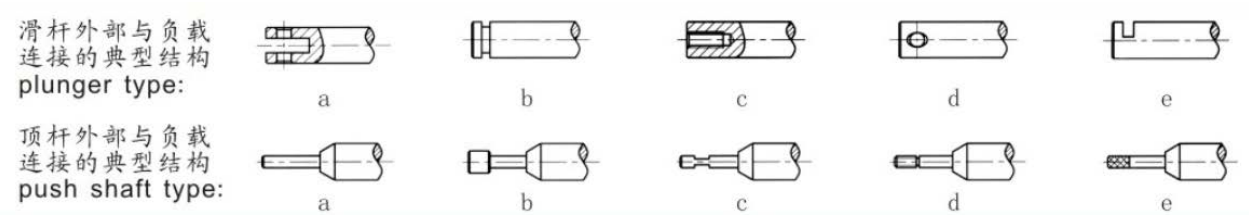

Mechanical Dimensions

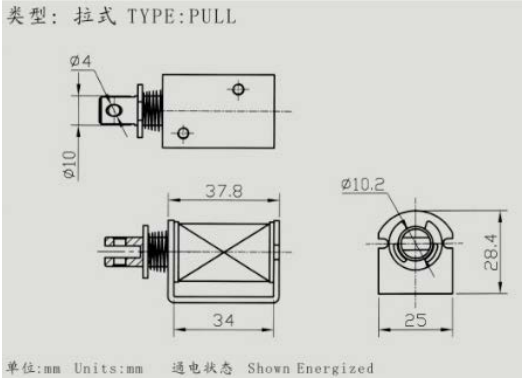

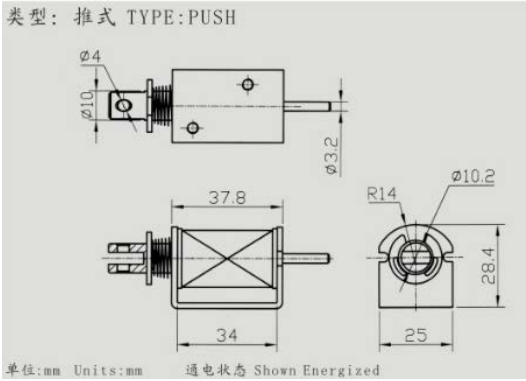

Ampere-Turns vs Force

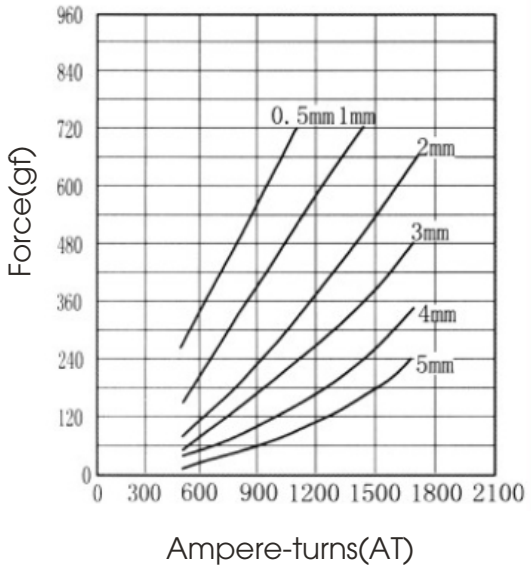

Stroke vs Force

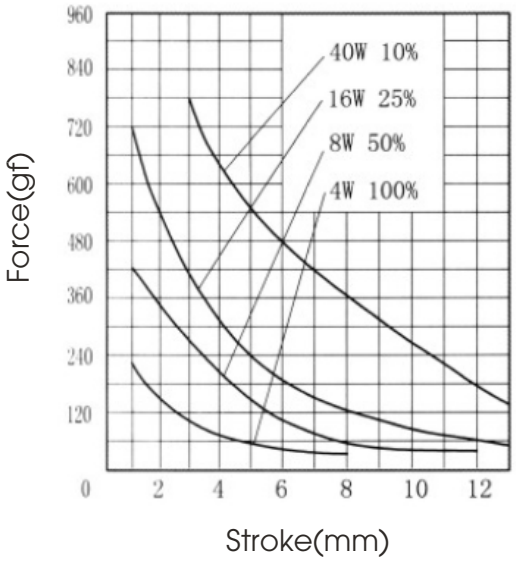

Stegia AB
Regattagatan 22B
723 48 Västerås, Sweden
+46 (0) 21 811 822
info@stegia.com

Stegia Shanghai Co., Ltd.
A-7, No.38, Dongsheng Rd
Pudong, Shanghai, China, 201201
+86 21 58591682

www.stegia.com

STEGIA

AF 0626L/S Solenoid Valve

Key Features

- Small and simple structure solutions
- Long Stroke and high performance
- Multiple plunger and push shaft type can be selected

General Specifications

Duty cycle(%)	Continuous 100%	Or less 50%	Or less 25%	Or less 10%
Max on time in sec(s)	∞	55	19	3
Watts at 20℃(w)	2.4	4.8	9.6	24
Ampere-turns at 20℃	432	615	864	1368

Part Number	Resistance (ohm)	No. Turns	Voltage (VDC)			
AF 0626 L XX A XX L: NC S: NO Voltage(V) Serial No.: A/B/C Resistance(Ω)	15	1080	6	8.5	12	19
	60	2160	12	17	24	38
	240	4320	24	34	48	76
	960	8640	48	68	96	152

Stegia AB
Regattagatan 22B
723 48 Västerås, Sweden
+46 (0) 21 811 822
info@stegia.com

Stegia Shanghai Co., Ltd.
A-7, No.38, Dongsheng Rd
Pudong, Shanghai, China, 201201
+86 21 58591682

www.stegia.com

General Features

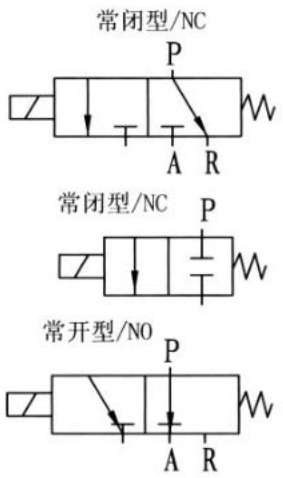

综 合 特 性
GENERAL FEATURES

1. 常用压力: 0~750mmHg/0~1Bar
Pressure: 0~750mmHg/0~1Bar
2. 最小通径: ⌀1.5mm
Min Orifice: ⌀1.5mm
3. 流体介质: 空气,
Fluid medium: Air
4. 寿命: 典型值为500万次(on 1s, off 1s)
Lify cycle: 5,000, 000 cycles(on 1s, off 1s)
5. 绝缘等级: B类
Insulation class: class B

Optional Features

- Custom plunger and push shaft

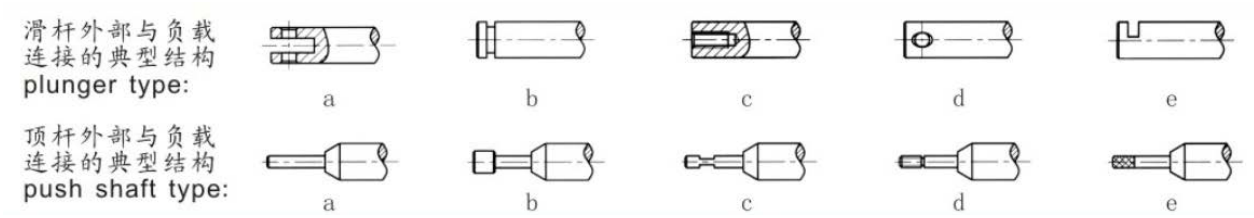

Mechanical Dimensions

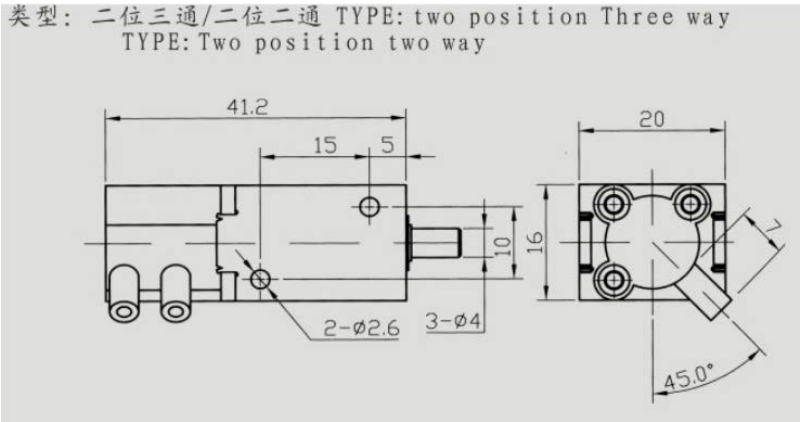

Stegia AB
Regattagatan 22B
723 48 Västerås, Sweden
+46 (0) 21 811 822
info@stegia.com

Stegia Shanghai Co., Ltd.
A-7, No.38, Dongsheng Rd
Pudong, Shanghai, China, 201201
+86 21 58591682

www.stegia.com

STEGIA

AF 1035L Solenoid Valve

Key Features

- Small and simple structure solutions
- Long Stroke and high performance
- Multiple plunger and push shaft type can be selected

General Specifications

Duty cycle(%)	Continuous 100%	Or less 50%	Or less 25%	Or less 10%
Max on time in sec(s)	∞	100	36	7
Watts at 20℃(w)	3	6	16	33
Ampere-turns at 20℃	350	496	699	1186

Part Number	Resistance (ohm)	No. Turns	Voltage (VDC)			
AF 1035 L XX A XX L: NC S: NO Voltage(V) Serial No.: A/B/C Resistance(Ω)	12	700	6	8.5	12	20
	48	1400	12	17	24	40
	192	2800	24	34	48	80

Stegia AB
Regattagatan 22B
723 48 Västerås, Sweden
+46 (0) 21 811 822
info@stegia.com

Stegia Shanghai Co., Ltd.
A-7, No.38, Dongsheng Rd
Pudong, Shanghai, China, 201201
+86 21 58591682

www.stegia.com

General Features

常闭型/NC

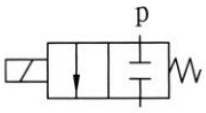

综 合 特 性
GENERAL FEATURES

1. 常用压力: 0~22500mmHg/0~30Bar
   Pressure: 0~22500mmHg/0~30Bar
2. 最小通径: ⌀2.5mm
   Min Orifice: ⌀2.5mm
3. 流体介质: 绝缘液压油
   Fluid medium: Insulation hydraulic oil
4. 寿命: 典型值为100万次(on ls, off ls)
   Lify cycle: 1,000, 000 cycles(on ls, off ls)
5. 绝缘等级: H类
   Insulation class: class H

Optional Features

- Custom plunger and push shaft

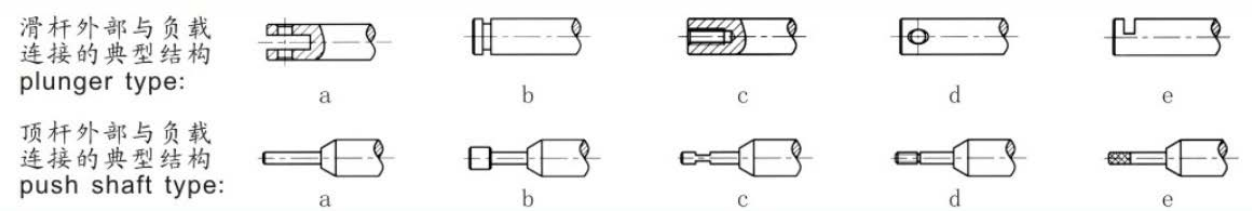

Mechanical Dimensions

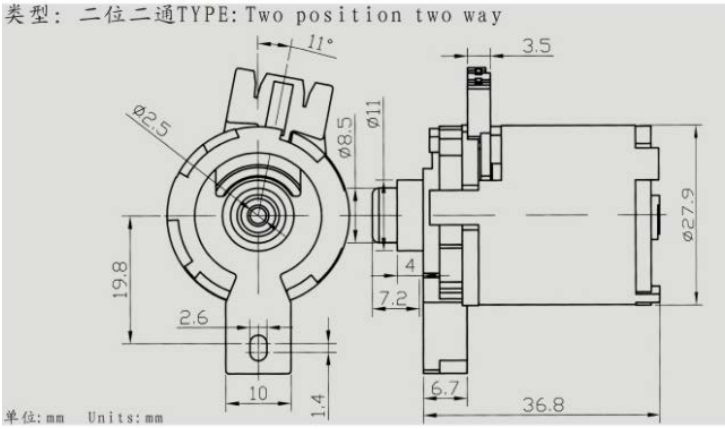

Stegia AB
Regattagatan 22B
723 48 Västerås, Sweden
+46 (0) 21 811 822
info@stegia.com

Stegia Shanghai Co., Ltd.
A-7, No.38, Dongsheng Rd
Pudong, Shanghai, China, 201201
+86 21 58591682

www.stegia.com

STEGIA

AK 0520 Keep Solenoid

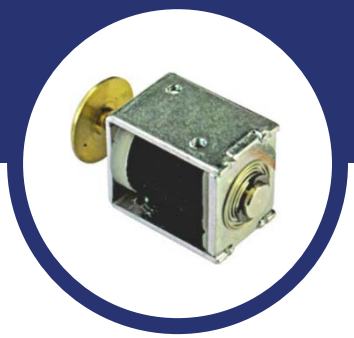

Key Features

- Small and simple structure solutions
- Self-holding function and energy conservation
- Multiple plunger and push shaft type can be selected

General Specifications

Duty cycle(%)	Continuous 100%	Or less 50%	Or less 25%	Or less 10%
Max on time in sec(s)	-	-	2	1
Watts at 20℃(w)	-	-	10	1.5
Ampere-turns at 20℃	-	-	674	250

Part Number	Resistance (ohm)	Holding Force (power off)	Voltage (VDC)			
AK 0520 L XX A XX XX L: Pull S: Push Voltage(V) Serial No.: A/B/C One Phase Resistance(Ω) One Phase Resistance(Ω)	24	＞200gf	6	-	-	-
	14.4	＞200gf	12	-	-	-
	14.4	＞200gf	24	-	-	-
	14.4	＞200gf	48	-	-	-

Stegia AB
Regattagatan 22B
723 48 Västerås, Sweden
+46 (0) 21 811 822
info@stegia.com

Stegia Shanghai Co., Ltd.
A-7, No.38, Dongsheng Rd
Pudong, Shanghai, China, 201201
+86 21 58591682

www.stegia.com

STEGIA

Optional Features

- Custom plunger and push shaft

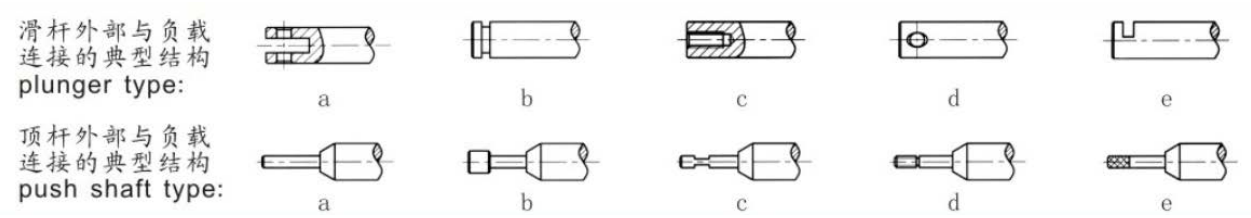

Mechanical Dimensions

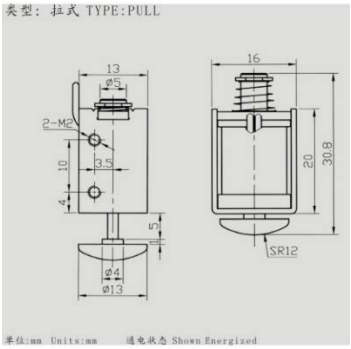

Application Circuit

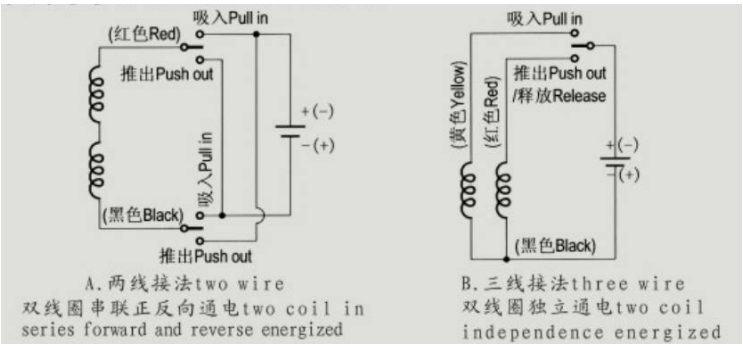

Ampere-Turns vs Force

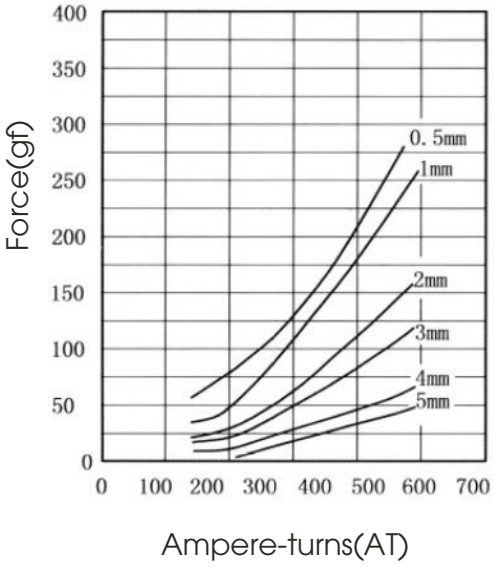

Stroke vs Force

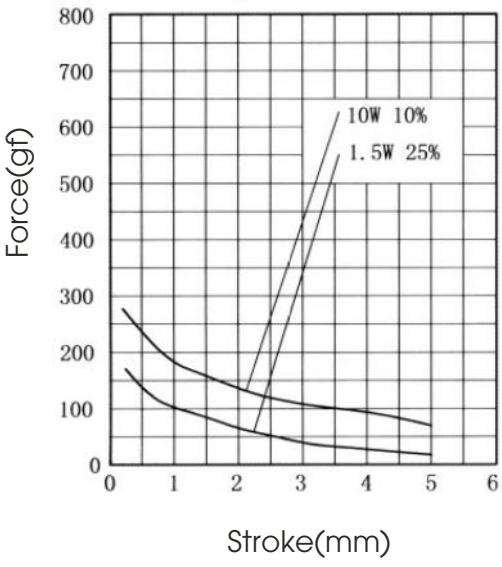

Stegia AB
Regattagatan 22B
723 48 Västerås, Sweden
+46 (0) 21 811 822
info@stegia.com

Stegia Shanghai Co., Ltd.
A-7, No.38, Dongsheng Rd
Pudong, Shanghai, China, 201201
+86 21 58591682

www.stegia.com

STEGIA

AK 1263 Keep Solenoid

Key Features

- Small and simple structure solutions
- Self-holding function and energy conservation
- Multiple plunger and push shaft type can be selected

General Specifications

Duty cycle(%)	Continuous 100%	Or less 50%	Or less 25%	Or less 10%
Max on time in sec(s)	-	-	2	1
Watts at 20℃(w)	-	-	38.4	24
Ampere-turns at 20℃	-	-	2032	1640

Part Number	Resistance (ohm)	Holding Force (power off)	Voltage (VDC)			
AK 1263 L XX A XX XX L: Pull S: Push Voltage(V) Serial No.: A/B/C One Phase Resistance(Ω) One Phase Resistance(Ω)	6	＞4000gf	12	-	-	-
	15	＞4000gf	24	-	-	-
	-	-	-	-	-	-
	-	-	-	-	-	-

Stegia AB
Regattagatan 22B
723 48 Västerås, Sweden
+46 (0) 21 811 822
info@stegia.com

Stegia Shanghai Co., Ltd.
A-7, No.38, Dongsheng Rd
Pudong, Shanghai, China, 201201
+86 21 58591682

www.stegia.com

Optional Features

- Custom plunger and push shaft

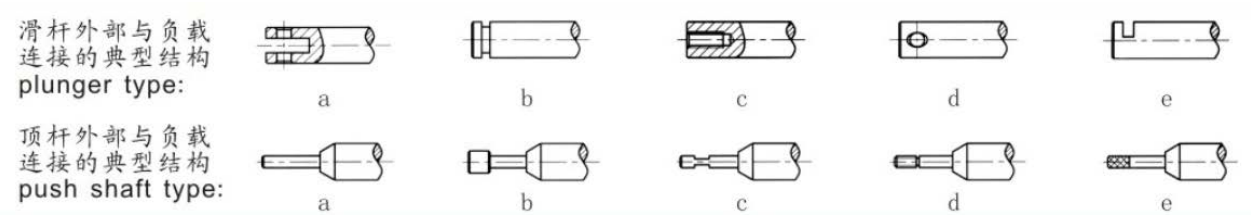

Mechanical Dimensions

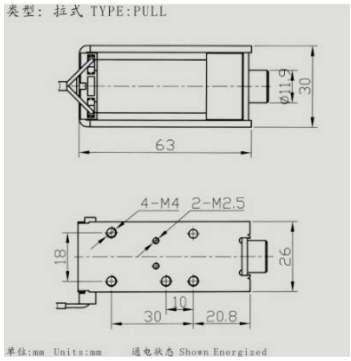

Application Circuit

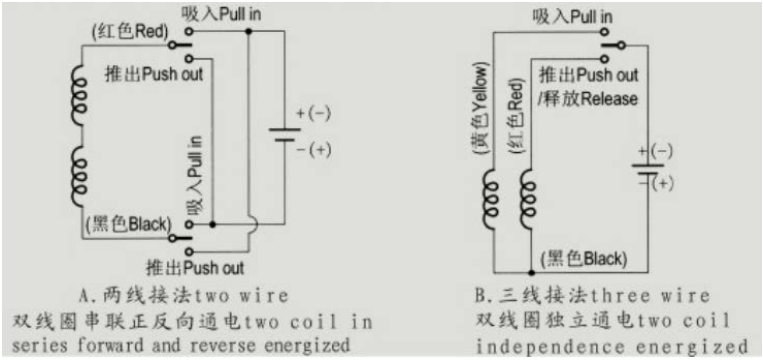

Ampere-Turns vs Force

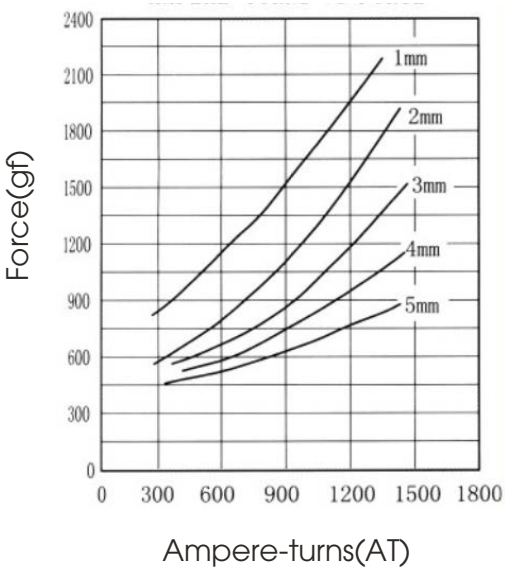

Stroke vs Force

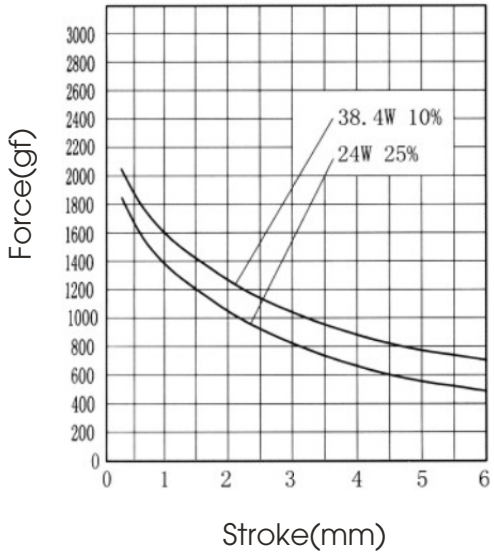

Stegia AB
Regattagatan 22B
723 48 Västerås, Sweden
+46 (0) 21 811 822
info@stegia.com

Stegia Shanghai Co., Ltd.
A-7, No.38, Dongsheng Rd
Pudong, Shanghai, China, 201201
+86 21 58591682

www.stegia.com

STEGIA

AO 3918L&S Tubular Solenoid

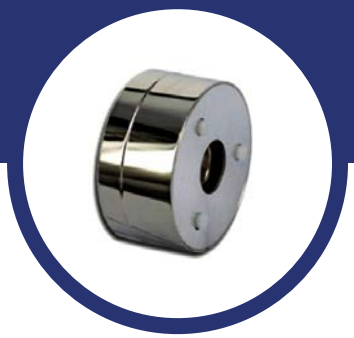

Key Features

- Small and simple structure solutions
- High performance
- Multiple plunger and push shaft type can be selected

General Specifications

Duty cycle(%)	Continuous 100%	Or less 50%	Or less 25%	Or less 10%
Max on time in sec(s)	∞	50	18	3
Watts at 20℃(w)	9	18	36	90
Ampere-turns at 20℃	582	794	1086	1658

Part Number	Resistance (ohm)	No. Turns	Voltage (VDC)			
AO 3918 L XX A XX L: Pull S: Push Voltage(V) Serial No.: A/B/C Resistance(Ω)	4	388	6	8.5	12	19
	16	747	12	17	24	38
	64	1448	24	34	48	76
	256	2838	48	68	96	152

Stegia AB
Regattagatan 22B
723 48 Västerås, Sweden
+46 (0) 21 811 822
info@stegia.com

Stegia Shanghai Co., Ltd.
A-7, No.38, Dongsheng Rd
Pudong, Shanghai, China, 201201
+86 21 58591682

www.stegia.com

Optional Features

- Custom plunger and push shaft

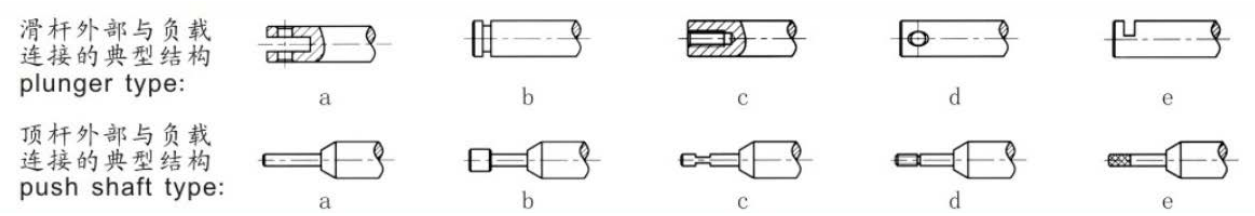

Mechanical Dimensions

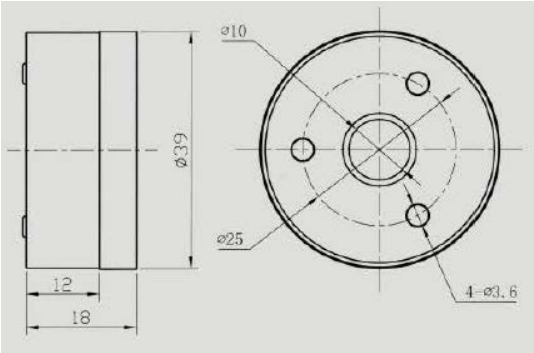

Ampere-Turns vs Force

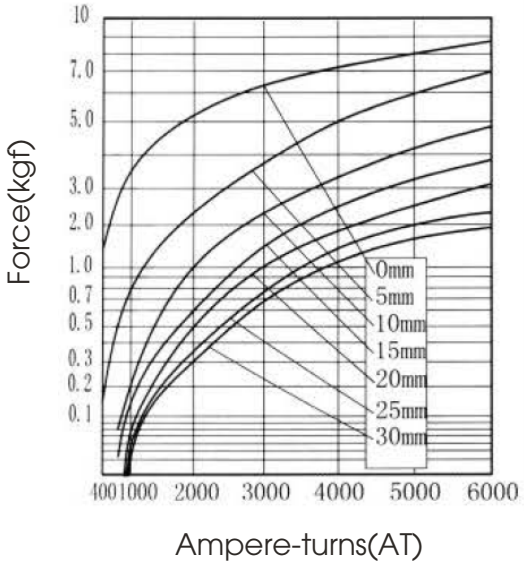

Stroke vs Force

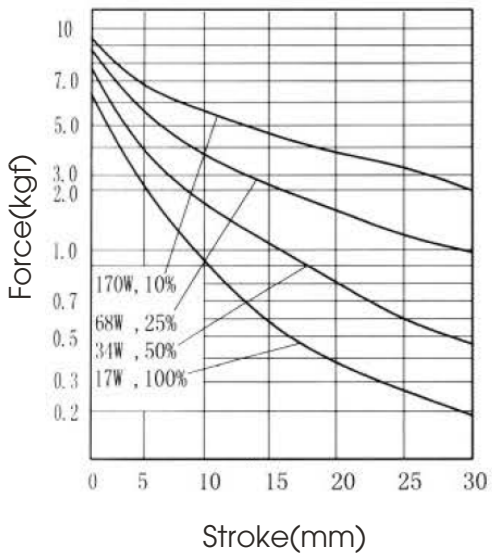

Stegia AB
Regattagatan 22B
723 48 Västerås, Sweden
+46 (0) 21 811 822
info@stegia.com

Stegia Shanghai Co., Ltd.
A-7, No.38, Dongsheng Rd
Pudong, Shanghai, China, 201201
+86 21 58591682

www.stegia.com

STEGIA

AT 0830 Solenoid Pump

Key Features

- Small and simple structure solutions
- High pressure output, dynamic regulation

General Specifications

Electrical connection:

Connect a diode as show below for AC, and use a square pulse transform for DC

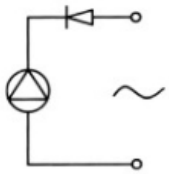

No-load time: ≤3 minute, Life time: 800h, Piston Spring: Corrosion resistance stainless

Fluids: Water or other No-corrosive liquid

Product type	Duty Cycle (%)	Voltage (VAC)	Resistance (ohm)	Power input(W)	0Bar flow rate (cc/min)	Max pressure (Bar)	Insulation class	dB(A)
ZHP-0830-220A1100	100	220	1100	14	250	1.2	H	55
ZHP-0830-220B1100	100	220	1100	14	180	3.2	H	55

Stegia AB
Regattagatan 22B
723 48 Västerås, Sweden
+46 (0) 21 811 822
info@stegia.com

Stegia Shanghai Co., Ltd.
A-7, No.38, Dongsheng Rd
Pudong, Shanghai, China, 201201
+86 21 58591682

www.stegia.com

Mechanical Dimensions

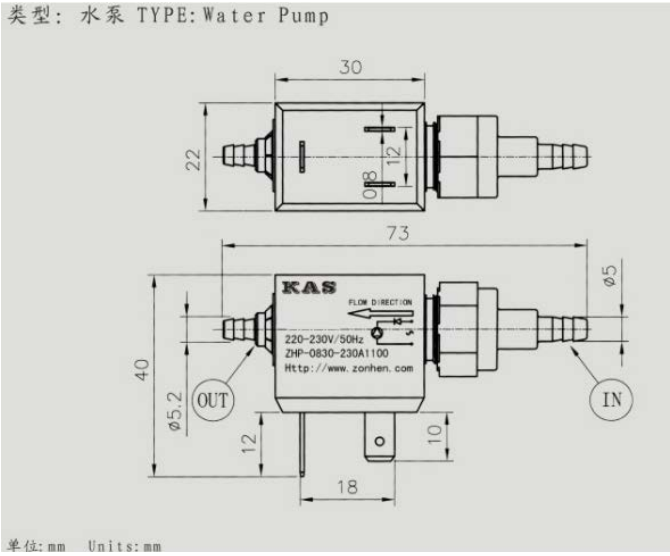

Flow curve

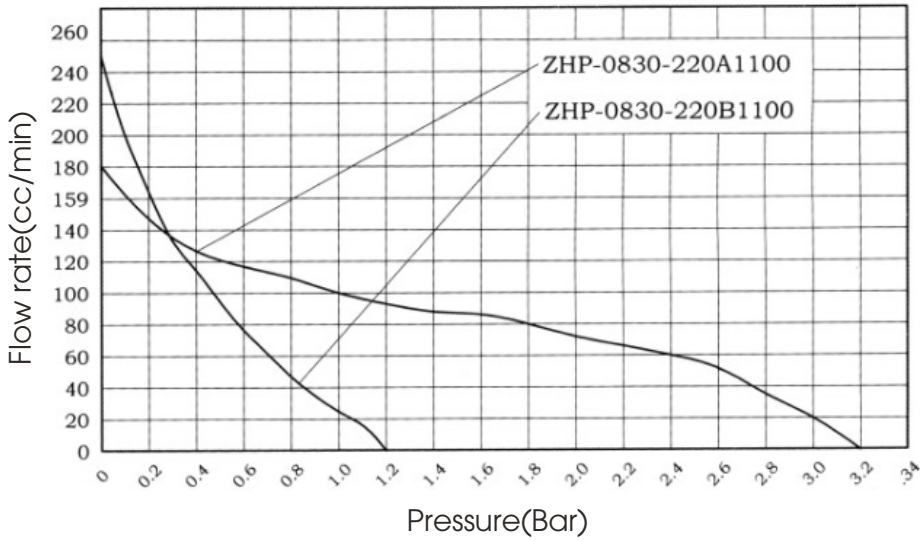

Stegia AB
Regattagatan 22B
723 48 Västerås, Sweden
+46 (0) 21 811 822
info@stegia.com

Stegia Shanghai Co., Ltd.
A-7, No.38, Dongsheng Rd
Pudong, Shanghai, China, 201201
+86 21 58591682

www.stegia.com

STEGIA

AT 1550 Solenoid Pump

Key Features

- Small and simple structure solutions
- High pressure output, dynamic regulation

General Specifications

Electrical connection:

Connect as show below for AC, and use a square pulse transform for DC

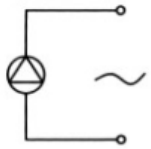

No-load time: ≤3 minute, Working cycle: 1.5 minute, Life time: 20000Cycle

Piston Spring: Corrosion resistance stainless

Fluids: Water or other No-corrosive liquid

Product type	Duty Cycle (%)	Voltage (VAC)	Resistance (ohm)	Power input(W)	0Bar flow rate (cc/min)	Max pressure (Bar)	Insulation class	dB(A)
AT-1550-230A165	50	230	165	45	600	15	F	75
AT-1550-230B165	50	230	165	45	450	20	F	75

Stegia AB
Regattagatan 22B
723 48 Västerås, Sweden
+46 (0) 21 811 822
info@stegia.com

Stegia Shanghai Co., Ltd.
A-7, No.38, Dongsheng Rd
Pudong, Shanghai, China, 201201
+86 21 58591682

www.stegia.com

STEGIA

Mechanical Dimensions

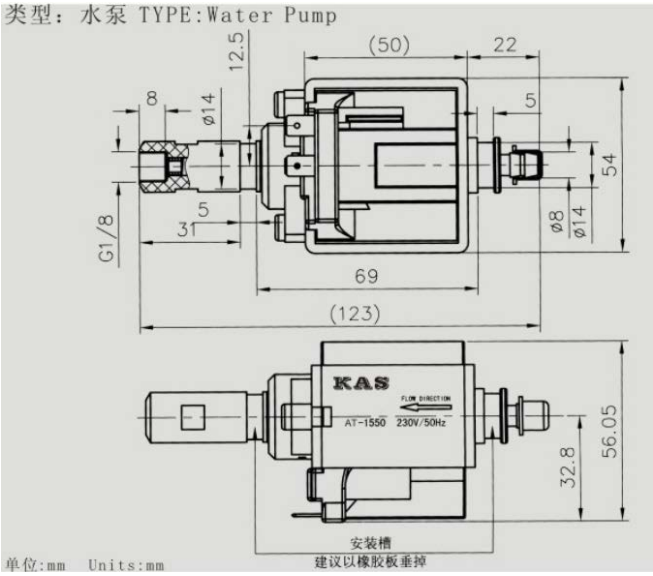

Flow curve

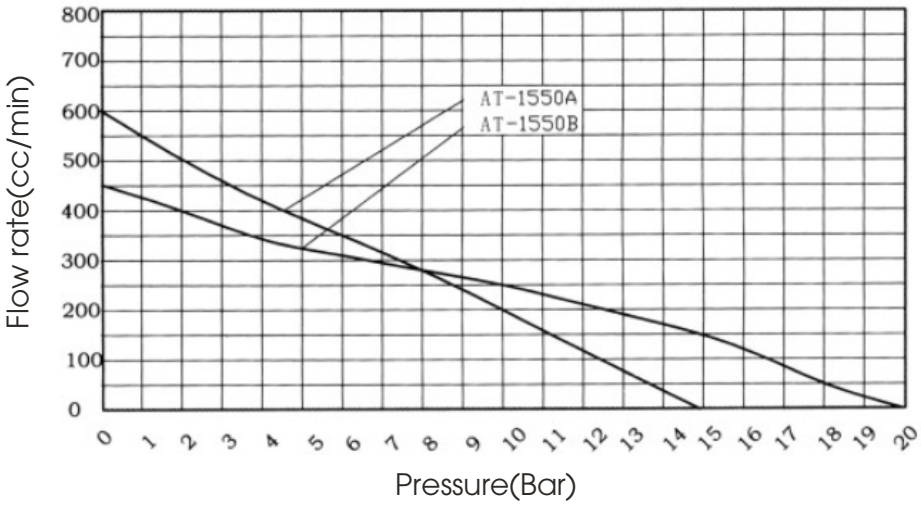

Stegia AB
Regattagatan 22B
723 48 Västerås, Sweden
+46 (0) 21 811 822
info@stegia.com

Stegia Shanghai Co., Ltd.
A-7, No.38, Dongsheng Rd
Pudong, Shanghai, China, 201201
+86 21 58591682

www.stegia.com

STEGIA

AU 0420L&S Open Frame Solenoid

Key Features

- Small and simple structure solutions
- Long Stroke and high performance
- Multiple plunger and push shaft type can be selected

General Specifications

Duty cycle(%)	Continuous 100%	Or less 50%	Or less 25%	Or less 10%
Max on time in sec(s)	∞	50	18	3
Watts at 20℃(w)	1.2	2.4	4.8	12
Ampere-turns at 20℃	243	338	477	737

Part Number	Resistance (ohm)	No. Turns	Voltage (VDC)			
AU 0420 L XX A XX L: Pull S: Push Voltage(V) Serial No. A/B/C Resistance(Ω)	7.5	609	3	4.2	6	19
	30	1193	6	8.5	12	19
	120	2385	12	17	24	38
	480	4656	24	34	48	76

Stegia AB
Regattagatan 22B
723 48 Västerås, Sweden
+46 (0) 21 811 822
info@stegia.com

Stegia Shanghai Co., Ltd.
A-7, No.38, Dongsheng Rd
Pudong, Shanghai, China, 201201
+86 21 58591682

www.stegia.com

Optional Features

- Custom plunger and push shaft

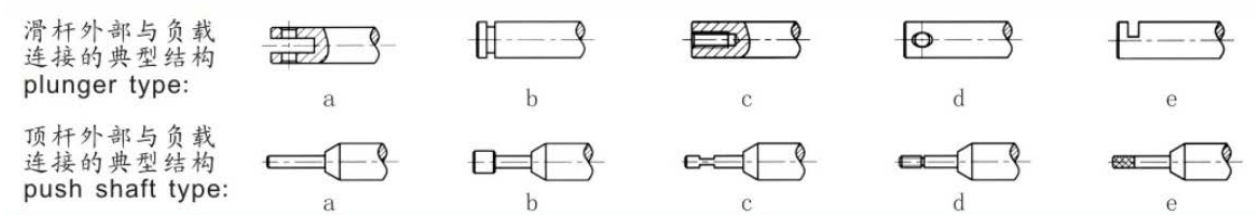

Mechanical Dimensions

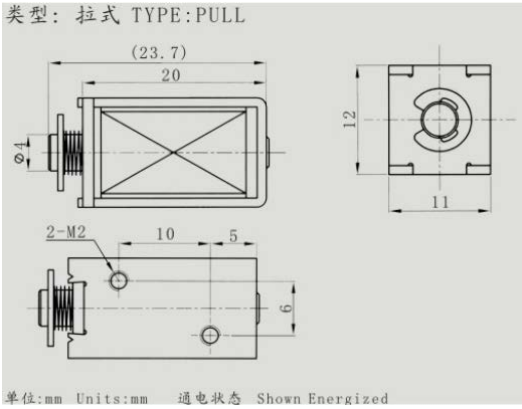

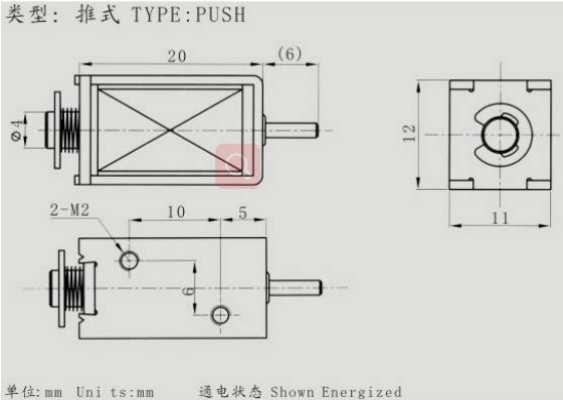

Ampere-Turns vs Force

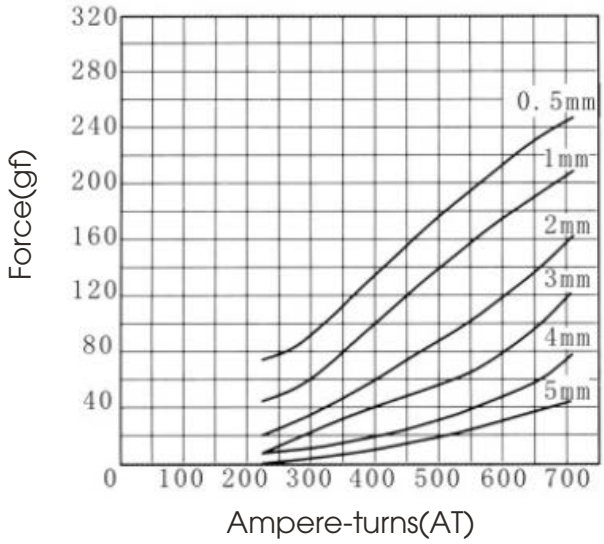

Stroke vs Force

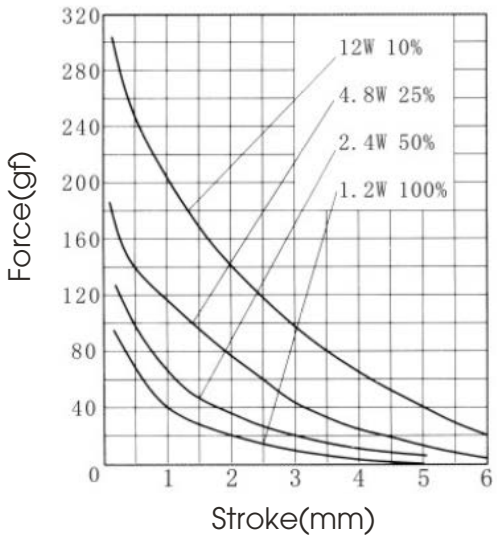

Stegia AB
Regattagatan 22B
723 48 Västerås, Sweden
+46 (0) 21 811 822
info@stegia.com

Stegia Shanghai Co., Ltd.
A-7, No.38, Dongsheng Rd
Pudong, Shanghai, China, 201201
+86 21 58591682

www.stegia.com

STEGIA

AU 0630L&S Open Frame Solenoid

Key Features

- Small and simple structure solutions
- Long Stroke and high performance
- Multiple plunger and push shaft type can be selected

General Specifications

Duty cycle(%)	Continuous 100%	Or less 50%	Or less 25%	Or less 10%
Max on time in sec(s)	∞	50	19	3
Watts at 20℃(w)	2.4	4.8	9.6	24
Ampere-turns at 20℃	470	664	928	1374

Part Number	Resistance (ohm)	No. Turns	Voltage (VDC)			
AU 0630 L XX A XX L: Pull S: Push Voltage(V) Serial No. A/B/C Resistance(Ω)	15	1175	6	8.5	12	19
	60	2343	12	17	24	38
	240	4641	24	34	48	76
	960	8640	48	68	96	152

Stegia AB
Regattagatan 22B
723 48 Västerås, Sweden
+46 (0) 21 811 822
info@stegia.com

Stegia Shanghai Co., Ltd.
A-7, No.38, Dongsheng Rd
Pudong, Shanghai, China, 201201
+86 21 58591682

www.stegia.com

Optional Features

- Custom plunger and push shaft

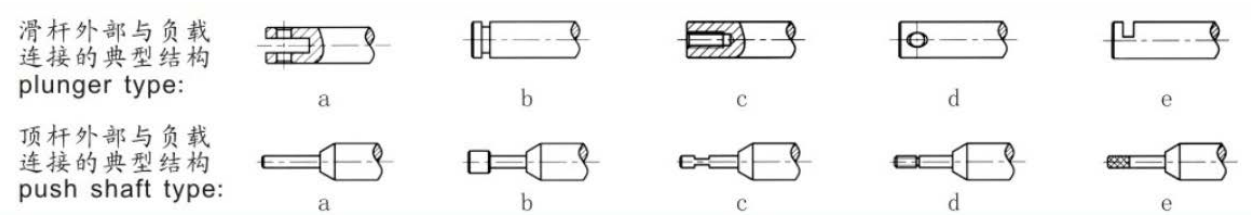

Mechanical Dimensions

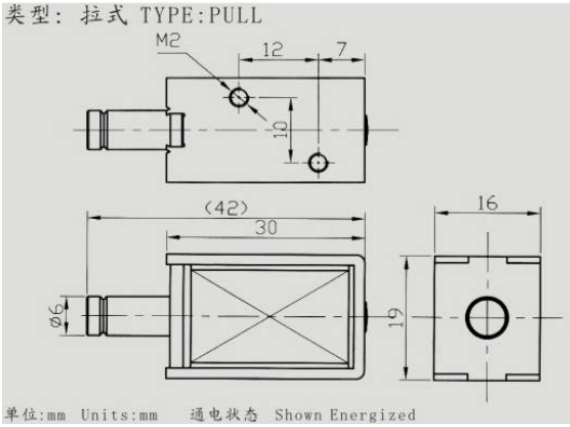

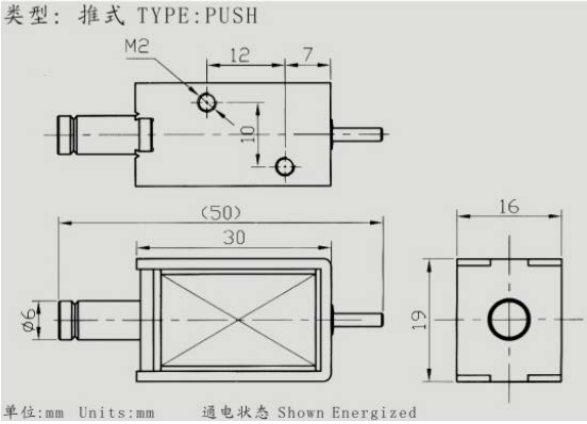

Ampere-Turns vs Force

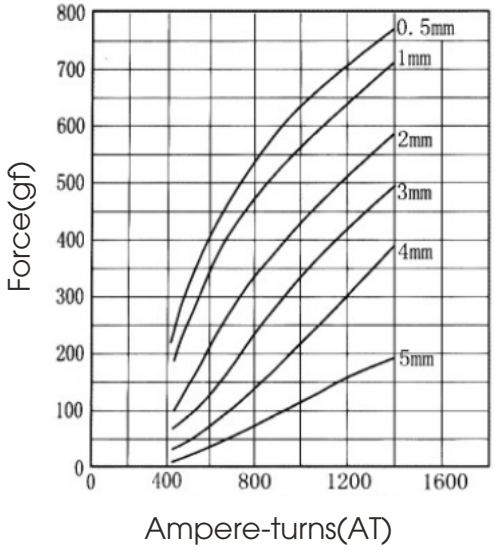

Stroke vs Force

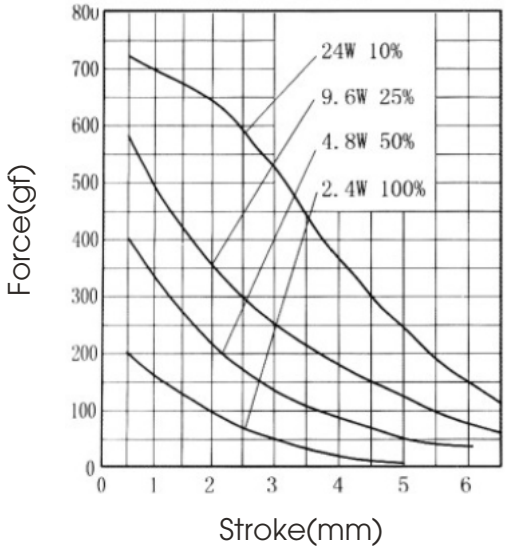

Stegia AB
Regattagatan 22B
723 48 Västerås, Sweden
+46 (0) 21 811 822
info@stegia.com

Stegia Shanghai Co., Ltd.
A-7, No.38, Dongsheng Rd
Pudong, Shanghai, China, 201201
+86 21 58591682

www.stegia.com

STEGIA

AU 0745L&S Open Frame Solenoid

Key Features

- Small and simple structure solutions
- Long Stroke and high performance
- Multiple plunger and push shaft type can be selected

General Specifications

Duty cycle(%)	Continuous 100%	Or less 50%	Or less 25%	Or less 10%
Max on time in sec(s)	∞	50	19	3
Watts at 20℃(w)	2.2	4.4	8.8	22
Ampere-turns at 20℃	601	836	1183	1749

Part Number	Resistance (ohm)	No. Turns	Voltage (VDC)			
AU 0745 L XX A XX L: Pull S: Push Voltage(V) Serial No. A/B/C Resistance(Ω)	16.4	1643	6	8.5	12	19
	65.5	3221	12	17	24	38
	262	6458	24	34	48	76
	1047	12052	48	68	96	152

Stegia AB
Regattagatan 22B
723 48 Västerås, Sweden
+46 (0) 21 811 822
info@stegia.com

Stegia Shanghai Co., Ltd.
A-7, No.38, Dongsheng Rd
Pudong, Shanghai, China, 201201
+86 21 58591682

www.stegia.com

Optional Features

- Custom plunger and push shaft

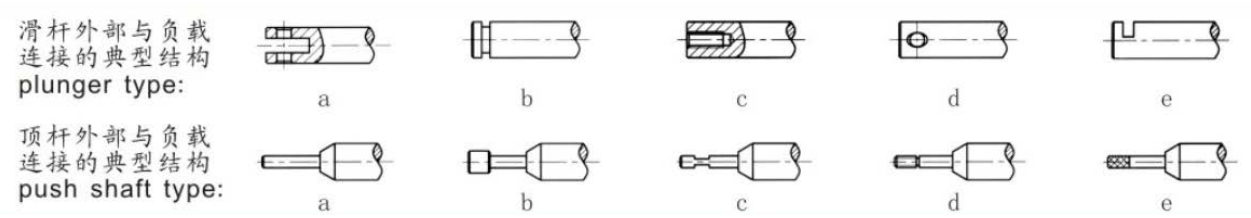

Mechanical Dimensions

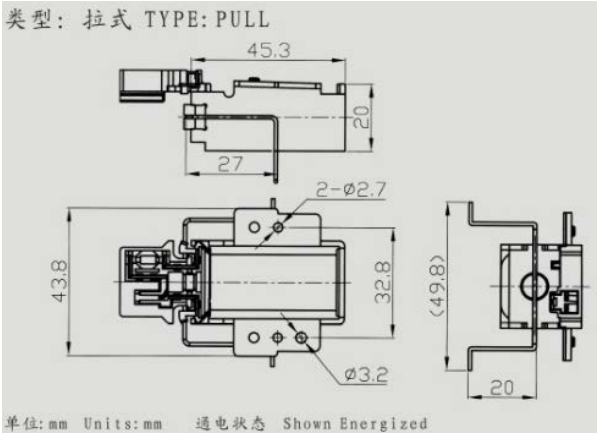

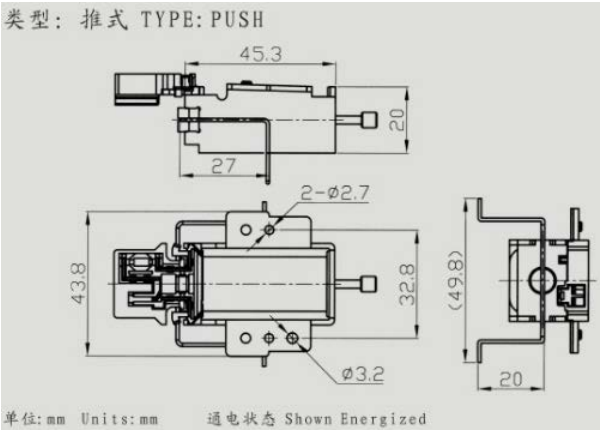

Ampere-Turns vs Force

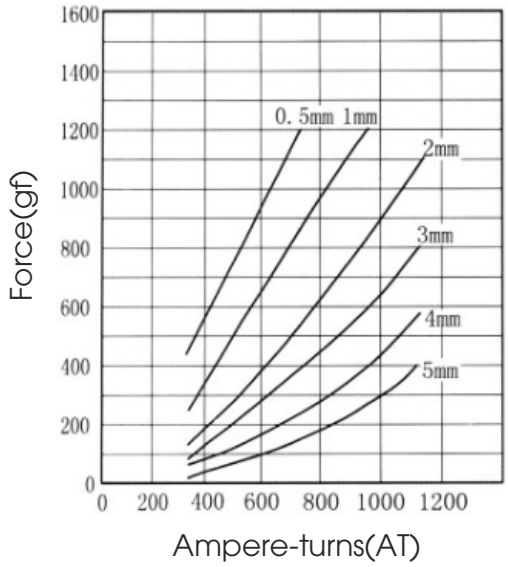

Stroke vs Force

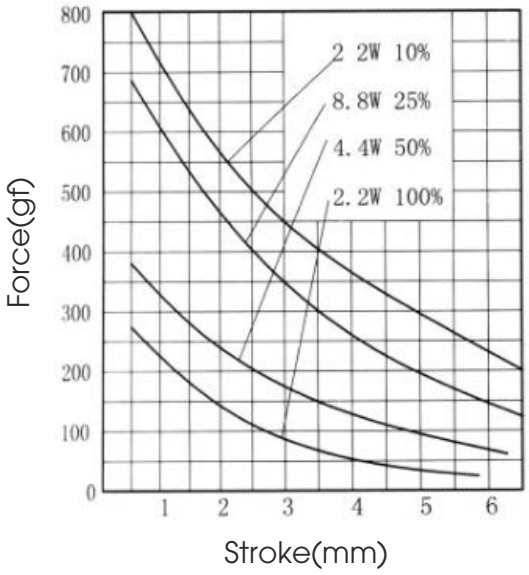

Stegia AB
Regattagatan 22B
723 48 Västerås, Sweden
+46 (0) 21 811 822
info@stegia.com

Stegia Shanghai Co., Ltd.
A-7, No.38, Dongsheng Rd
Pudong, Shanghai, China, 201201
+86 21 58591682

www.stegia.com

STEGIA

AU 0837L&S Open Frame Solenoid

Key Features

- Small and simple structure solutions
- Long Stroke and high performance
- Multiple plunger and push shaft type can be selected

General Specifications

Duty cycle(%)	Continuous 100%	Or less 50%	Or less 25%	Or less 10%
Max on time in sec(s)	∞	100	36	7
Watts at 20℃(w)	4	8	16	40
Ampere-turns at 20℃	608	858	1212	1870

Part Number	Resistance (ohm)	No. Turns	Voltage (VDC)			
AU 0837 L XX A XX L: Pull S: Push Voltage(V) Serial No.: A/B/C Resistance(Ω)	9	911	6	8.5	12	19
	36	1818	12	17	24	38
	144	3637	24	34	48	76
	576	7119	48	68	96	152

Stegia AB
Regattagatan 22B
723 48 Västerås, Sweden
+46 (0) 21 811 822
info@stegia.com

Stegia Shanghai Co., Ltd.
A-7, No.38, Dongsheng Rd
Pudong, Shanghai, China, 201201
+86 21 58591682

www.stegia.com

Optional Features

- Custom plunger and push shaft

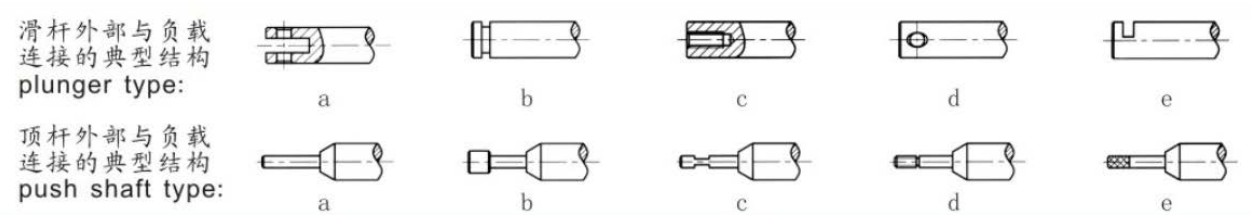

Mechanical Dimensions

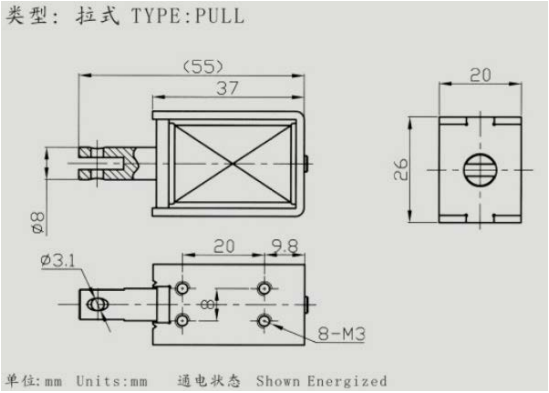

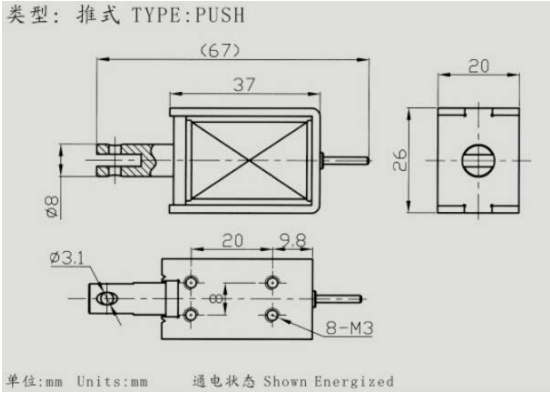

Ampere-Turns vs Force

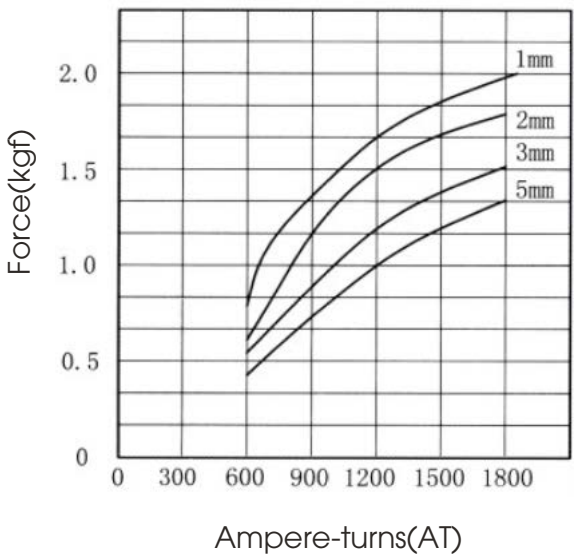

Stroke vs Force

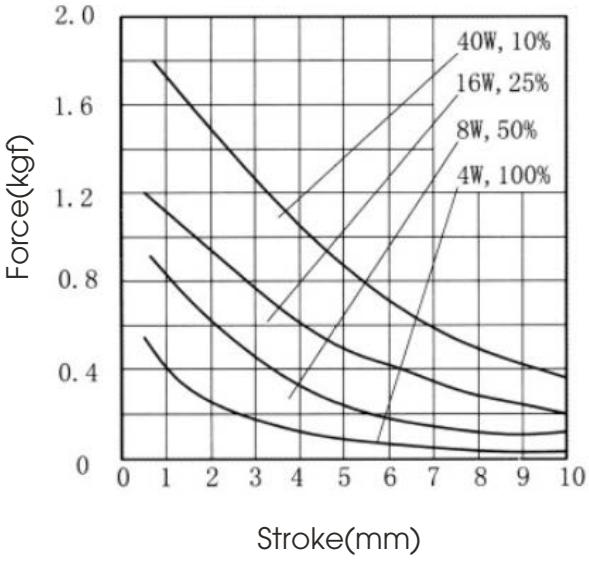

Stegia AB
Regattagatan 22B
723 48 Västerås, Sweden
+46 (0) 21 811 822
info@stegia.com

Stegia Shanghai Co., Ltd.
A-7, No.38, Dongsheng Rd
Pudong, Shanghai, China, 201201
+86 21 58591682

www.stegia.com

STEGIA

AU 0942L&S Open Frame Solenoid

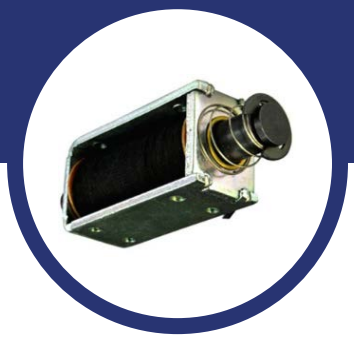

Key Features

- Small and simple structure solutions
- Long Stroke and high performance
- Multiple plunger and push shaft type can be selected

General Specifications

Duty cycle(%)	Continuous 100%	Or less 50%	Or less 25%	Or less 10%
Max on time in sec(s)	∞	50	18	3
Watts at 20℃(w)	4.3	8.6	16.8	43
Ampere-turns at 20℃	561	747	1000	1528

Part Number	Resistance (ohm)	No. Turns	Voltage (VDC)			
AU 0942 L XX A XX L: Pull S: Push Voltage(V) Serial No. A/B/C Resistance(Ω)	8.4	786	6	8.5	12	19
	33.6	1473	12	17	24	38
	134	2792	24	34	48	76
	536	5388	48	68	96	152

Stegia AB
Regattagatan 22B
723 48 Västerås, Sweden
+46 (0) 21 811 822
info@stegia.com

Stegia Shanghai Co., Ltd.
A-7, No.38, Dongsheng Rd
Pudong, Shanghai, China, 201201
+86 21 58591682

www.stegia.com

STEGIA

Optional Features

- Custom plunger and push shaft

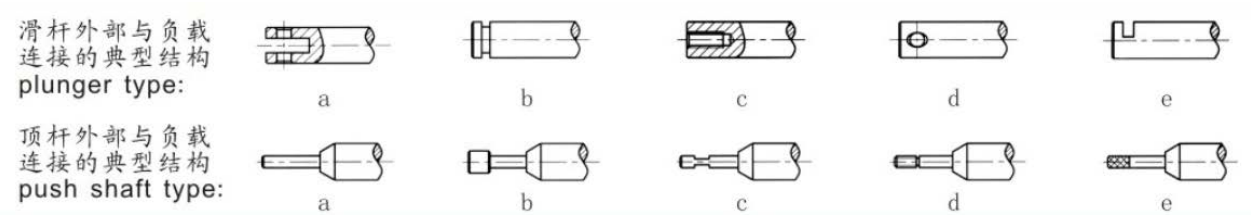

Mechanical Dimensions

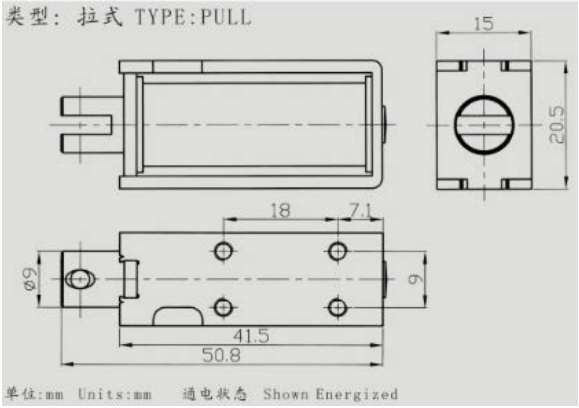

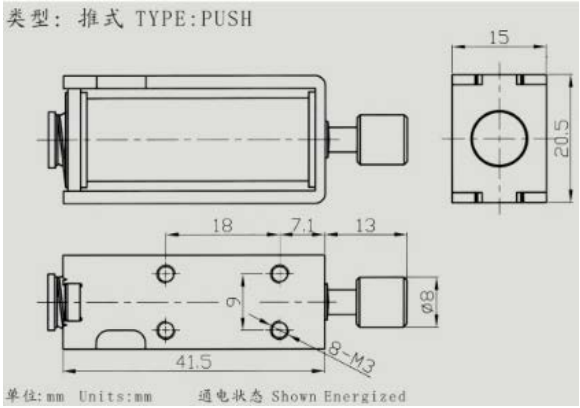

Ampere-Turns vs Force

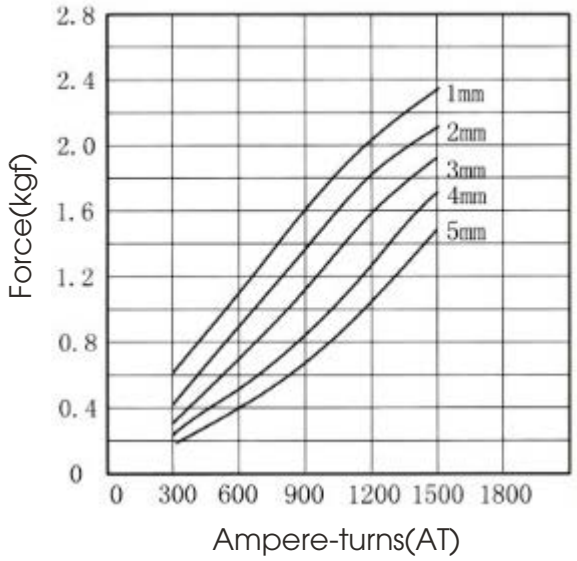

Stroke vs Force

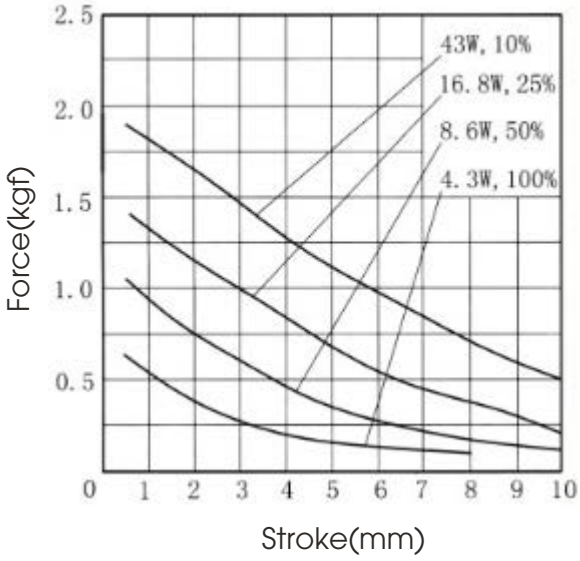

Stegia AB
Regattagatan 22B
723 48 Västerås, Sweden
+46 (0) 21 811 822
info@stegia.com

Stegia Shanghai Co., Ltd.
A-7, No.38, Dongsheng Rd
Pudong, Shanghai, China, 201201
+86 21 58591682

www.stegia.com

STEGIA

AU 1564L&S Open Frame Solenoid

Key Features

- Small and simple structure solutions
- Long Stroke and high performance
- Multiple plunger and push shaft type can be selected

General Specifications

Duty cycle(%)	Continuous 100%	Or less 50%	Or less 25%	Or less 10%
Max on time in sec(s)	∞	50	18	3
Watts at 20℃(w)	8	16	32	80
Ampere-turns at 20℃	1209	1661	2272	3554

Part Number	Resistance (ohm)	No. Turns	Voltage (VDC)			
AU 1564 L XX A XX L: Pull S: Push Voltage(V) Serial No. A/B/C Resistance(Ω)	4.5	906	6	8.5	12	19
	18	1759	12	17	24	38
	72	3408	24	34	48	76
	288	6734	48	68	96	152

Stegia AB
Regattagatan 22B
723 48 Västerås, Sweden
+46 (0) 21 811 822
info@stegia.com

Stegia Shanghai Co., Ltd.
A-7, No.38, Dongsheng Rd
Pudong, Shanghai, China, 201201
+86 21 58591682

www.stegia.com

Optional Features

- Custom plunger and push shaft

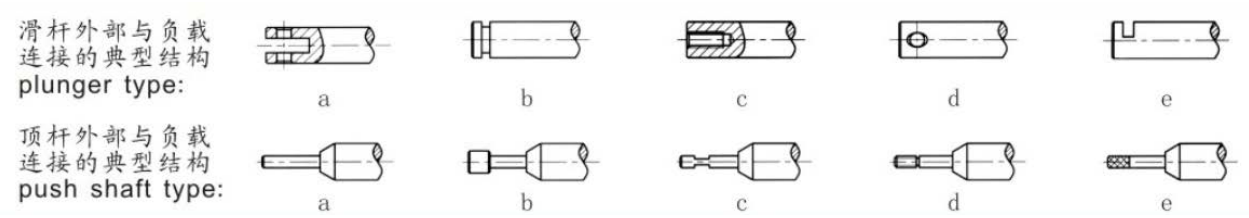

Mechanical Dimensions

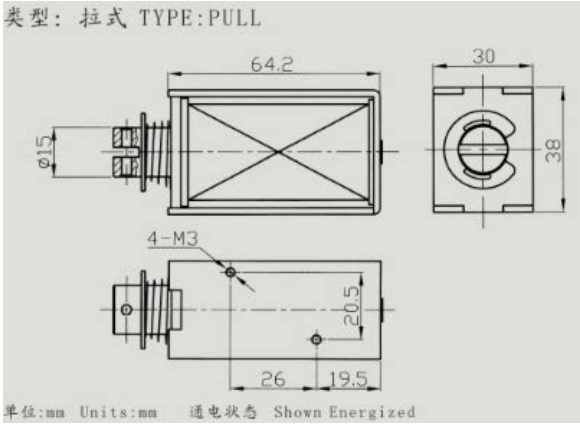

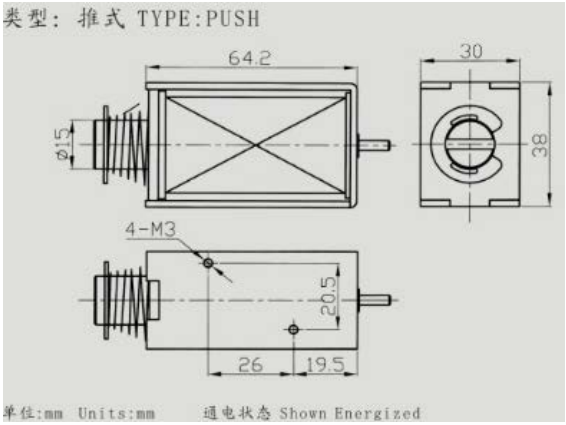

Ampere-Turns vs Force

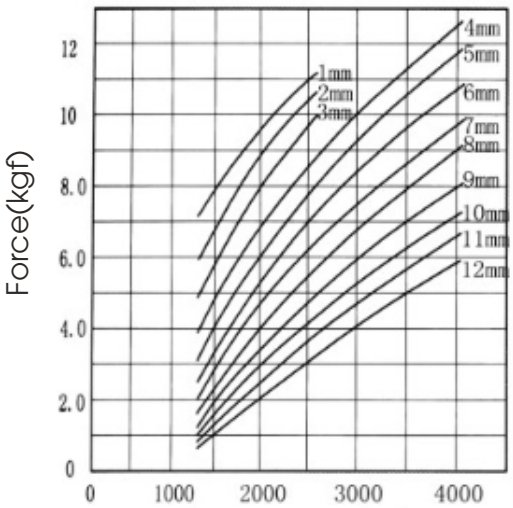

Stroke vs Force

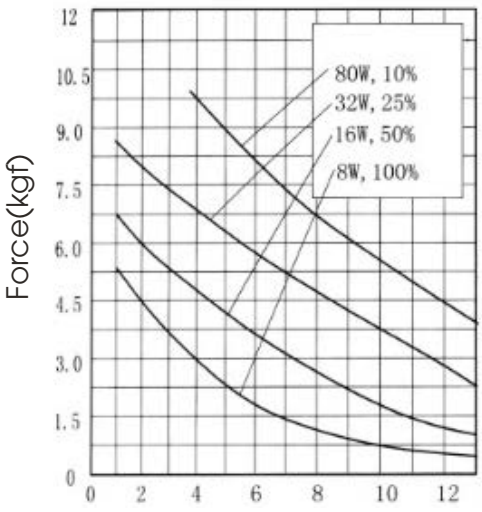

Stegia AB
Regattagatan 22B
723 48 Västerås, Sweden
+46 (0) 21 811 822
info@stegia.com

Stegia Shanghai Co., Ltd.
A-7, No.38, Dongsheng Rd
Pudong, Shanghai, China, 201201
+86 21 58591682

www.stegia.com

STEGIA

AU 1640S Massager Solenoid

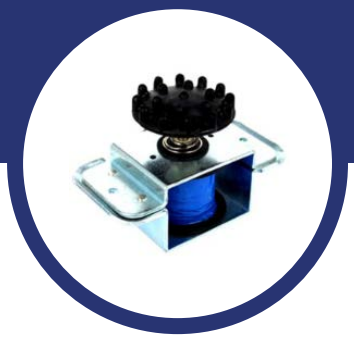

Key Features

- Small and simple structure solutions
- Long operation time, low temperature rise

General Specifications

- Stroke: 0-7.5mm, Power input(half-wave rectification): 75W
- Noise: Lower than 60dB with No-load
- Temperature rise: 85℃Max, Life cycle: 50 Million cycles
- Dielectric strength: 2500VAC 1min.

Duty cycle(%)	Continuous 100%	Or less 25%	Or less 10%	Or less 5%
Max on time in sec(s)	-	-	10	5
Ampere-turns at 20℃	-	-	9240	14432
Thermal protection temperature(℃)	100-120℃			

Part Number	Resistance (ohm)	Tapping Force	Voltage (VAC)			
AU 1640 S XX A XX S: Push Voltage(V) Serial No. A/B/C Resistance(Ω)	12.5	>6 kgf	110	-	-	-
	25	>6 kgf	220	-	-	-
	50	>6 kgf	220	-	-	-

Stegia AB
Regattagatan 22B
723 48 Västerås, Sweden
+46 (0) 21 811 822
info@stegia.com

Stegia Shanghai Co., Ltd.
A-7, No.38, Dongsheng Rd
Pudong, Shanghai, China, 201201
+86 21 58591682

www.stegia.com

Mechanical Dimensions

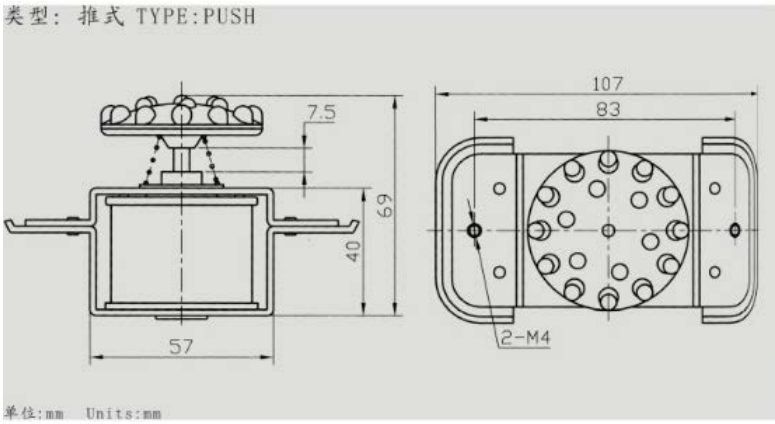

Ampere-Turns vs Force

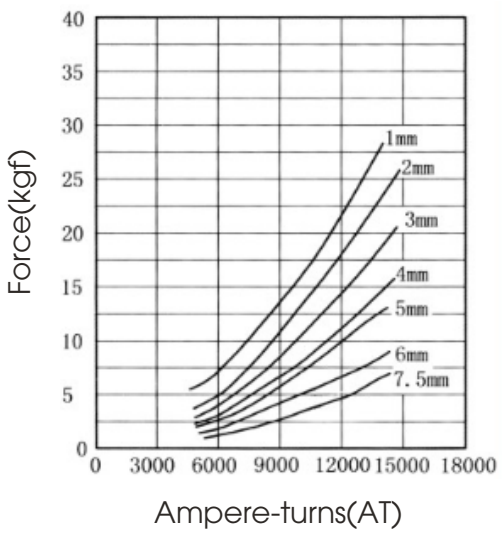

Stroke vs Force

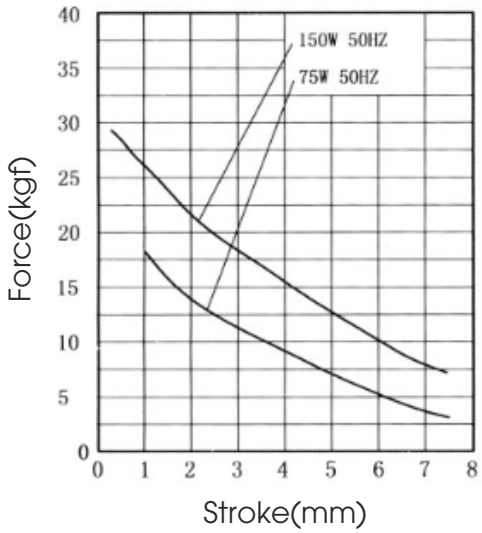

Stegia AB
Regattagatan 22B
723 48 Västerås, Sweden
+46 (0) 21 811 822
info@stegia.com

Stegia Shanghai Co., Ltd.
A-7, No.38, Dongsheng Rd
Pudong, Shanghai, China, 201201
+86 21 58591682

www.stegia.com

STEGIA

AU 2834S Massager Solenoid

Key Features

- Small and simple structure solutions
- Long operation time, low temperature rise

General Specifications

- Stroke: 0-10mm, Power input(half-wave rectification): 75W
- Noise: Lower than 60dB with No-load
- Temperature rise: 70℃Max, Life cycle: 50 Million cycles
- Dielectric strength: 2500VAC 1min.

Duty cycle(%)	Continuous 100%	Or less 25%	Or less 10%	Or less 5%
Max on time in sec(s)	-	15	10	5
Ampere-turns at 20℃	-	8653	9617	10266
Thermal protection temperature(℃)	100-120℃			

Part Number	Resistance (ohm)	Tapping Force	Voltage (VAC)			
AU 2834 S XX A XX S: Push Voltage(V) Serial No. A/B/C Resistance(Ω)	7.5	>8 kgf	110	120	-	-
	35	>8 kgf	220	230	-	-
	40	>8 kgf	220	230	-	-
	45	>8 kgf	220	230	-	-

Stegia AB
Regattagatan 22B
723 48 Västerås, Sweden
+46 (0) 21 811 822
info@stegia.com

Stegia Shanghai Co., Ltd.
A-7, No.38, Dongsheng Rd
Pudong, Shanghai, China, 201201
+86 21 58591682

www.stegia.com

Mechanical Dimensions

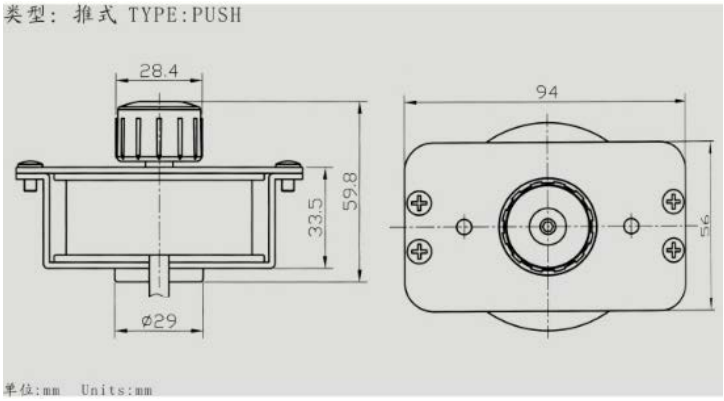

Ampere-Turns vs Force

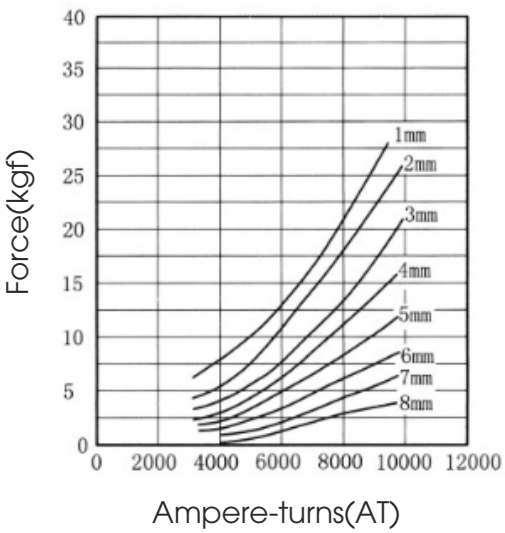

Stroke vs Force

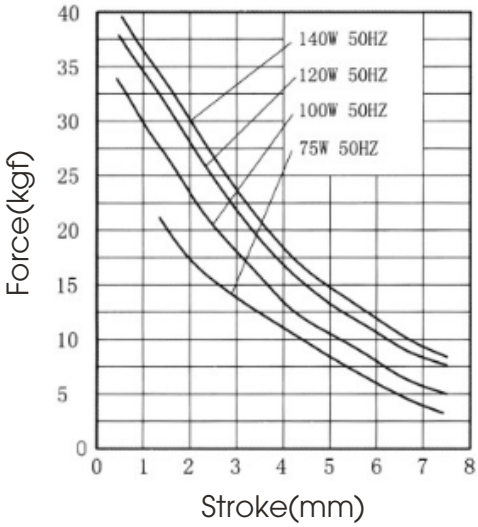

Stegia AB
Regattagatan 22B
723 48 Västerås, Sweden
+46 (0) 21 811 822
info@stegia.com

Stegia Shanghai Co., Ltd.
A-7, No.38, Dongsheng Rd
Pudong, Shanghai, China, 201201
+86 21 58591682

www.stegia.com

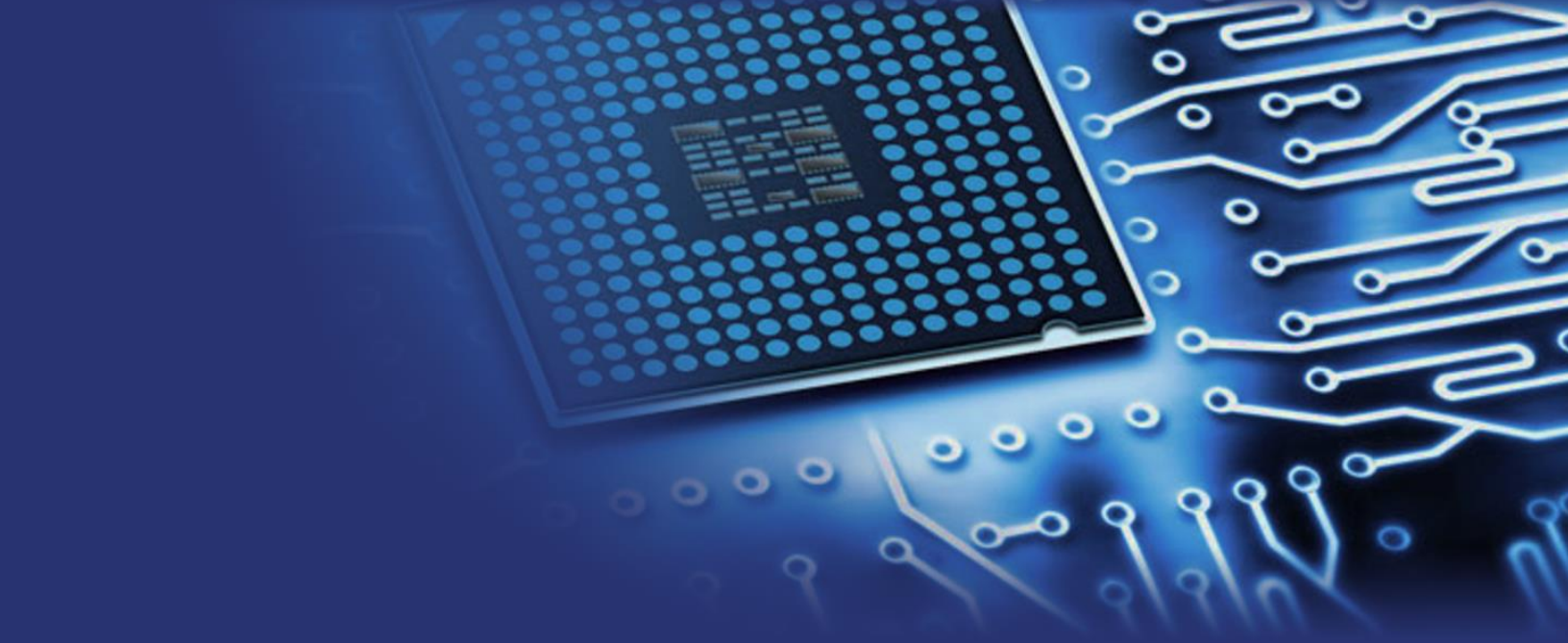

Contact information
Stegia AB
Regattagatan 22B
723 48 Västerås Sweden
+46 (0) 21 811 822
Info@stegia.se
www.stegia.com

STEGIA
Innovative drive technology since 1993